SRSTI 52.47.25 https://doi.org/10.52081/tst.2026.v03.i15.087

REGULATION OF PUMP-EJECTOR SYSTEM OPERATING MODES UNDER VARIABLE FLOW OF LOW-PRESSURE ASSOCIATED PETROLEUM GAS

Tanzharikov P.A., candidate of technical sciences, professor
pan_19600214@mail.ru,https://orcid.org/0000-0002-6490-9972
Amangeldiyeva G.B., Master's Degree in Oil and Gas Engineering
amangeldieva74@mail.ru, https://orcid.org/0000-0002-9187-8104
Makhatova N. Sh. Master of Engineering and Technology
Nurgik_82@mail.ru, https://orcid.org/0000-0002-9187-8104
Sarabekova U.Zh.[1]* PhD, associate professor
emanex@mail.ru, https://orcid.org/0000-0001-9548-8333

Korkyt Ata Kyzylorda University, Kyzylorda, Kazakhstan

Abstract. The paper considers the selection and regulation of operating modes of a pump-ejector system under a wide variation in the flow rate of low-pressure associated petroleum gas. The study aims to determine, through a re-analysis of published experimental characteristics, the effects of gas flow rate and working pressure upstream of the nozzle on the ejector pressure differential and efficiency, and to refine a regulation principle for variable gas flow conditions. In the data considered, the daily gas flow rate varied from 650 to 8880 m³/day, with a maximum-to-minimum ratio of 13.66. The ejector working pressure ranged from 0.4 to 2.13 MPa; the gas flow rate corresponding to maximum-efficiency modes varied from 1.26 to 5.51 L/s, while the ejector pressure differential ranged from 0.106 to 0.699 MPa. Increasing the working pressure shifted the effective operating range toward higher gas flow rates, whereas the variation in maximum efficiency did not exceed 0.9% over 0.8–2.13 MPa. The results indicate that pump shaft speed can be used as the primary regulation parameter, while a short-term cyclic operating mode can supplement frequency regulation when the gas-flow variation is wide.

Keywords: associated petroleum gas, pump-ejector system, liquid-gas ejector, working pressure, gas flow rate, efficiency, operating-mode regulation.

Introduction. The use of low-pressure associated petroleum gas at oil production facilities is complicated by changes in gas flow over time. The instability of the gas flow changes the operating point of the ejector and does not allow the once selected mode to be maintained for the entire period of use. Pump-ejector systems allow low-pressure gas to be introduced into the water-gas mixture without additional mechanical compression using the energy of the liquid flow, and for this reason can be used in associated gas use and water-gas effect technologies [1-4].

The operating mode of the pump-ejector system depends on the pressure and flow rate of the working fluid, gas consumption, pressures in the intake chamber and the exhaust part of the system, as well as on the hydrodynamic parameters of the flow. The literature shows the ability to adapt the system to variable gas consumption by changing the pressure and energy characteristics of the ejector, including adjusting the pump speed [1,2]. The operating characteristics of liquid-gas ejectors are also influenced by nozzle geometry, working pressure, and gas retention conditions [5-9].

In this paper, changes in the flow rate of low-pressure associated gas and the operating characteristics of the ejector are considered in interconnection. A feature of the analysis is the assessment of not only the individual maximum efficiency point, but also the effective working area, which must be maintained when the gas consumption changes. This approach makes it possible to clarify the principle of practical adjustment for the selection of working pressure and changing the pump mode.

The purpose of the study is to substantiate the principle of regulation of the operating modes of the pump – ejector system in conditions of variable flow of low-pressure associated petroleum gas based on a re-analysis of the published experimental characteristics. To achieve this goal: the scale of changes in gas consumption was evaluated; the effect of working pressure

on the pressure difference in the ejector was analyzed; the dependence of efficiency on gas consumption was considered; the change in gas consumption in accordance with the modes of maximum efficiency was evaluated; based on the results, the principle of regulation of the mode was formulated.

Research materials and methods. The object of the study is a pump – ejector technological complex designed for use in the system of preparation and injection of a water-gas mixture of low-pressure associated petroleum gas. In the technological scheme, the separated liquid phase is fed to the pump as a working fluid, after which it is directed to the ejector nozzle. Through the intake chamber, low-pressure gas is drawn into the ejector, and the formed water-gas mixture is fed to the injection line. As the main elements of the system, a pump, a liquid-gas ejector, a water line, a low-pressure gas line and a water-gas mixture injection line are considered.

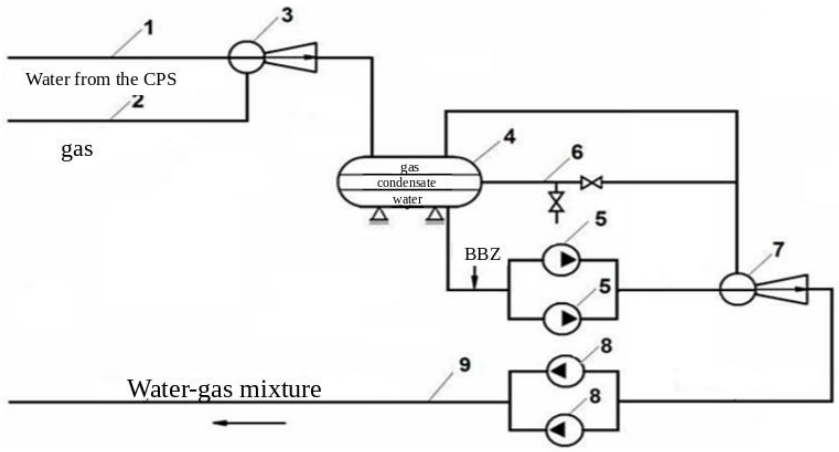

Figure 1– is a principled view of the technological scheme that implements the water-gas effect

The published experimental characteristics at variable flow rates of low pressure associated gas were used as the main material for the analysis [1]. The daily dynamics of gas consumption and the pressure and energy characteristics of the ejector at four working pressures were compared. Therefore, the results presented in this work are not considered as a new bench experiment, but as a systematized re-analysis of published experimental data.

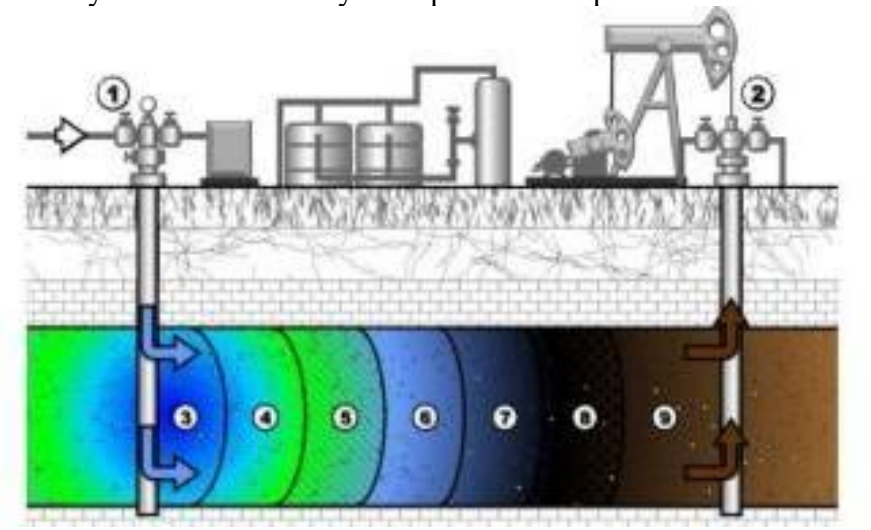

Figure 2 – the principle scheme of the water-gas effect injected into the layer

The pressure difference was taken as the main indicator of the ejector operation. It is determined by the pressure difference at the ejector outlet and the pressure difference in the receiving chamber:

$$Рэс = Рс – Рпр$$

here Res is the pressure difference in the ejector, MPA; RS is the pressure at the ejector outlet, MPA; RPR is the pressure in the receiving chamber, MPA.
Rs-pressure at the ejector outlet, MPA;
RPR-pressure in the receiving chamber, MPA.

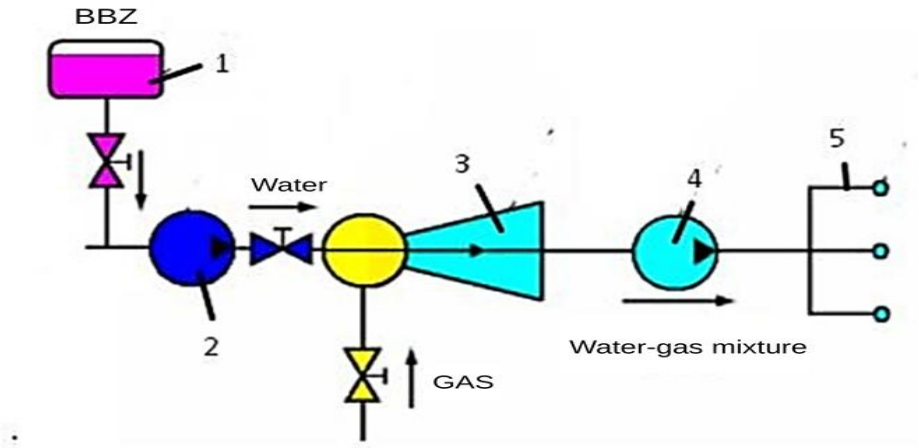

Figure 3 – the principle scheme of the pump-ejector system for the use of low-pressure associated gas

The analysis considered four working pressures in front of the nozzle: 0.4; 0.8; 1.59 and 2.13 MPA. For these modes, the pressure difference and efficiency curves when the gas flow changes were compared. The ratio of the maximum and minimum values of the working pressure was equal to 5.33. In maximum efficiency modes, the pressure difference in the ejector varied from 0.106-0.699 MPA, and the gas consumption ranged from 1.26-5.51 L/s.
The analysis was carried out by comparing the shape of the experimental curves, the extreme values and their displacement towards the working pressure. No additional regression or analytical dependencies were identified according to the considered data. Therefore, the results obtained are interpreted not as a numerical equation of dependencies, but as an engineering characteristic for mode selection and regulation [10-13].

Research results and discussion. In the considered period, the daily consumption of associated petroleum gas varied in the range of 650-8880 m3/day. The ratio of the maximum and minimum values was 13.66 (Figure 4). Consequently, the change in gas flow is one of the main operational factors that directly affect the operating point of the system. In such a situation, keeping the ejector in a mode designed for only one constant gas consumption can lead to an exit from the effective working area.

The effect of working pressure on the pressure difference in the ejector. When the working pressure in front of the nozzle changed from 0.4 MPA to 2.13 MPA, that is, 5.33 times, the pressure difference in the ejector in accordance with the maximum efficiency modes varied from 0.106 to 0.699 MPA. The increase in pressure in this range expands the ejector's ability to operate at high gas costs. However, this result does not mean that it is necessary to keep the pressure at the maximum value all the time: the operating mode corresponding to the actual gas consumption must be observed.



Figure 4 – dynamics of changes in the daily consumption of Associated Petroleum Gas [1].

Figure 5 shows that maintaining the working pressure at a constant level in the event of a change in gas consumption is not equally suitable for all modes.

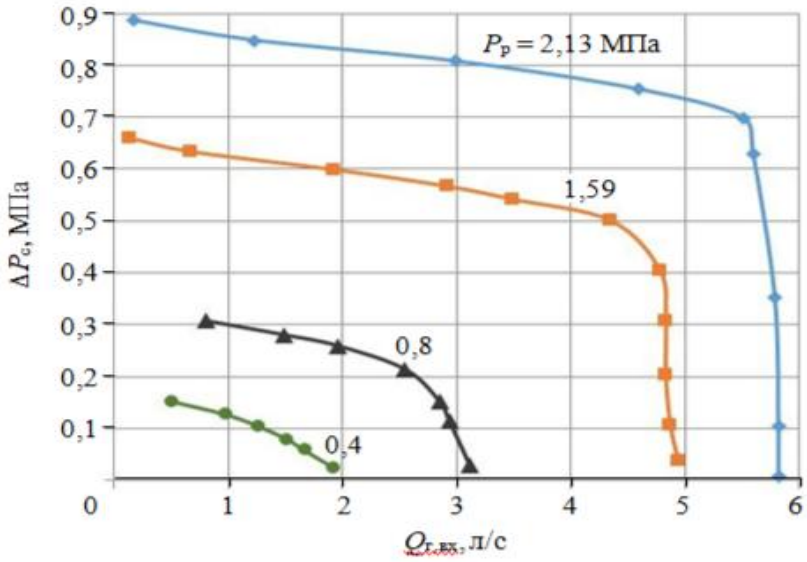

Figure 5 – dependence of the pressure difference of the res in the ejector on gas consumption [1]

As gas consumption increases, the decrease in pressure difference increases the risk of the ejector leaving the effective working area. In this regard, the gas flow rate or the control parameter proportional to it can be considered as a feedback signal for adjusting the working pressure. This proposal is considered in this work not as an experimental test of a separate automatic control system, but as a regulatory principle that follows from the characteristics obtained.

Dependence of ejector efficiency on gas consumption. A change in gas consumption in the range of 1.26–5.51 l/s according to the modes of maximum efficiency indicates that when the working pressure increases, the effective working area is shifted to the side of high gas consumption. That is, as the working pressure increases, the gas consumption corresponding to the maximum efficiency also increases. However, the available discrete experimental modes are not sufficient to describe this dependence in the form of a linear function (Figure 6). Therefore, this result allows us to interpret the effect of working pressure as a shift in the effective working area, and not as a quantitative regression.

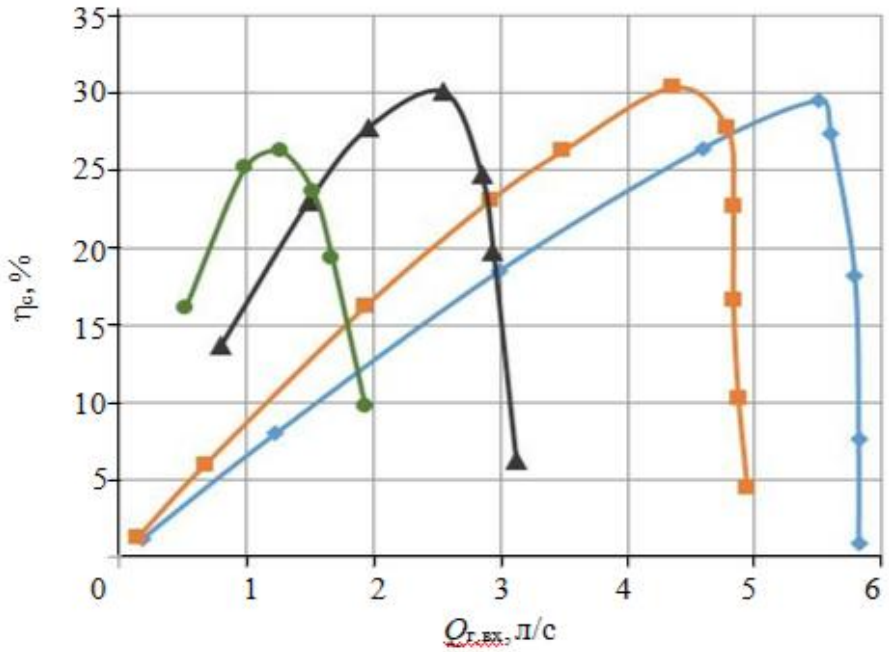

Figure 6 – dependence of the efficiency of a liquid-gas ejector on gas consumption [1]

As a result of the dependence of the maximum efficiency on the working pressure, it clarifies the practical criterion for choosing the operating mode: the working pressure should be selected not only according to the value of the maximum efficiency, but according to the correspondence of the actual gas consumption to the effective working area of the ejector.

In cases where the range of changes in gas consumption is wider than the possibility of frequency regulation, an additional use of a short-term cyclic mode of operation is provided. In this case, the system accumulates the necessary pressure, pumps gas through the ejector, and the cycle is repeated when the pressure reaches the set lower limit [1]. This approach is considered as an additional means of maintaining the system's operability in a wide range of changes.

The simple logical sequence of the regulation principle is given as follows:

$$Qg \rightarrow Pp \rightarrow Pэс \rightarrow \eta$$

where Qg - is the controlled gas consumption;
Pp- working pressure in front of the nozzle;
Res - pressure difference in the ejector;
η - ejector efficiency.

The essence of the algorithm is to first change the pump speed when the gas consumption changes. If the required operating mode is provided within this adjustment range, frequency adjustment remains as the main approach. If a change in gas consumption brings the system out of this range into the operating zone, the frequency regulation is supplemented by a short-term cyclic operating mode. The purpose of this solution is not to maintain the maximum efficiency permanently, but to maintain the effective working area of the ejector in conditions of real gas consumption.

When designing the system, the parameters of the pump and ejector must be checked taking into account the maximum expected gas consumption. During use, it is not required to keep the system stable in the maximum mode; the working pressure and fluid consumption need to be adjusted according to the actual gas consumption. Thus, the principle of regulation is implemented using the connection "gas flow - working pressure - pressure difference of the ejector - efficiency" [14,15].

Conclusion: a re-analysis of the published experimental characteristics showed that at variable flow rates of low-pressure associated petroleum gas, the operating mode of the pump-

ejector system can be adapted by changing the working pressure and the operating mode of the pump. In the considered modes, the working pressure was 0.4–2.13 MPa, the gas consumption corresponding to the maximum efficiency was 1.26-5.51 l/s, and the pressure difference in the ejector was in the range of 0.106–0.699 MPa.

The increase in working pressure moves the effective working area to the side of high gas consumption, but the change in the maximum efficiency is limited: in the range of 0.8-2.13 MPA, it does not exceed 0.9%. Therefore, when choosing a mode, the main condition should be taken as compliance with the effective working area of the ejector, which corresponds to the actual gas consumption, rather than striving for the maximum pressure value.

In cases where the change in gas consumption is relatively small, changing the speed of the pump shaft is recommended as the main adjustment method. In case of a change in gas consumption several times, in the considered data more than five times, it is necessary to supplement the frequency regulation with a short-term cyclic mode of operation [1]. The proposed principle can be applied to the choice of operating modes in systems for using low-pressure associated gas and pumping a water-gas mixture.

In this paper, there is no direct assessment of the oil yield of the reservoir, the production of additional oil and the economic efficiency of the technology. To determine these indicators, additional model and field studies are required in the geological and hydrodynamic conditions of a particular field [16-18].

Әдебиеттер:

[1] **Дроздов, А.Н.,** Горбылева Я.А. Совершенствование эксплуатации насосно-эжекторных систем при изменяющихся расходах попутного нефтяного газа // Записки Горного института.– 2019. –Т. 238.– С. 415-422. DOI: 10.31897/PMI.2019.4.415.

[2] **Дроздов, А.Н.,** Горелкина Е.И. Разработка насосно-эжекторной системы для реализации водогазового воздействия на пласт с использованием попутного нефтяного газа из затрубных пространств добывающих скважин // Записки Горного института.– 2022.– Т. 254. –С. 191-201. DOI: 10.31897/PMI.2022.34.

[3] **Насраддин, А.Ж.,** Танжариков П.А., Сүлейменов Н.С. Кен орындарында мұнайды сусыздандыруды зерттеу және жетілдіру//НЕФТЬ И ГАЗ.– Алматы,2022.– №5 (131).– С. 87-95.

[4] **Дроздов, А.Н.,** Дроздов Н.А. Перспективы развития технологии эксплуатации скважин с использованием струйного насоса в России // SPE Russian Petroleum Technology Conference.– 2015. SPE-176676-MS. DOI: 10.2118/176676-MS.

[5] **Танжариков, П.А.,** Тілеуберген А.Ж., Сүлейменов Н.С. Мұнай және газ кенорындарын пайдаланудағы терең сорапты қондырғыларды штангалық жабдықтарын жетілдіру // НЕФТЬ И ГАЗ.–Алматы, 2022.– №4 (130).– С. 74.

[6] **Бункин, Н.Ф.,** Дроздов А.Н., Дроздов Н.А., Козлов В.А., Туан В.М., Фуиль В.Л. Подавление коалесценции газовых пузырьков в водных растворах электролитов: зависимость от внешнего давления и скорости движения газа через колонну с жидкостью // Physics of Wave Phenomena. –2017. – Т. 25. – № 3. – С. 219-224. DOI: 10.3103/S1541308X17030098.

[7] **Дроздов, А.Н.,** Закенов С.Т., Олмашханов Н.П., Карабаев С.Д., Дроздов Н.А., Горелкина Е.И., Есниязов Д.Г., Кожанов А.А. Стендовые исследования влияния свободного газа на характеристики многоступенчатого центробежного насоса при откачке водогазовых смесей // Нефтяное хозяйство. –2020. –№ 8.– С. 96-99. DOI: 10.24887/0028-2448-2020-8-96-99.

[8] **Дроздов, А.Н.,** Закенов С.Т., Карабаев С.Д., Олмашханов Н.П., Дроздов Н.А., Есниязов Д.Г., Кожанов А.А. Влияние расстояния между соплом и горловиной на характеристики водоструйного газового насоса // Нефтяное хозяйство. – 2020. – № 8. – С. 92-95. DOI: 10.24887/0028-2448-2020-8-92-99.

[9] **Карабаев, С.,** Олмашханов Н., Мирсамиев Н., Мугишо Ж. Стендовое исследование насосно-эжекторной системы при одновременнй закачке воды и газа // ICAM 2019. Springer. – 2019. DOI: 10.1007/978-3-030-22974-0_52.

[10] Гидравлические характеристики жидкостно-газового эжекторного насоса со сплошной жидкостной струёй // Chemical Engineering Research and Design.– 2021.– Т. 168.– С. 435-442. DOI: 10.1016/j.cherd.2021.02.022.

[11] **Чжан Ю.**, Сунь Дж., Лю З. и др. Исследование оптимизации характеристик газожидкостного эжектора в устройстве для многофазного смешанного транспорта // Journal of Mechanics. – 2022.– Т. 38.– С. 22-31. DOI: 10.1093/jom/ufac001.

[12] Повышение коэффициента эжекции газа в жидкостно-газовом эжекторном насосе // Chemical Engineering Research and Design. – 2023.–Т.189. – С. 117-125. DOI: 10.1016/j.cherd.2022.11.009.

[13] **Горелкина, Е.И.** Методика расчета рабочих параметров жидкостно-газового эжектора с использованием среднеинтегральных характеристик // Scientific Proceedings of the NIPI Oil and Gas SOCAR. –2024. – № 4.– С. 102-110. DOI: 10.5510/OGP20240401024.

[14] **Дроздов, А.Н.,** Чернишов К.И., Калинников В.Н., Закиев А.Р., Галимов А.М., Горелкина Е.И. Закачка водогазовых смесей в пласт насосно-эжекторной системой с использованием пресной и высокоминерализованной пластовой воды // Нефтяное хозяйство. – 2025. –№ 2.– С. 54-57. DOI: 10.24887/0028-2448-2025-2-54-57.

[15] **Дроздов, А.Н.,** Вербицкий В.С., Шишулин В.А., Горелкина Е.И. Исследование рабочих характеристик жидкостно-газовых эжекторов для закачки водогазовых смесей в пласт // Нефтяное хозяйство. –2025. –№ 3. –С. 96-99. DOI: 10.24887/0028-2448-2025-3-96-99.

[16] **Муслимов, Р.Х.** Планирование дополнительной добычи нефти и оценка эффективности методов увеличения нефтеотдачи. – Казань: Казанский государственный университет, 1999.– 280 с.

[17] **Амиров, А.А.** Обзор применения технологии водогазового воздействия / А.А. Амиров // Молодой учёный.– 2020.– №20. – С. 77-79.

[18] **Кокорев, В.И.** Газовые методы — новая технология увеличения нефтеотдачи // Нефтепромысловое дело. –2009. –№ 11.– С. 24-27.

References:

[1] **Drozdov, A.N.,** Gorbyleva Ja.A. Sovershenstvovanie jekspluatacii nasosno-jezhektornyh sistem pri izmenjajushhihsja rashodah poputnogo neftjanogo gaza // Zapiski Gornogo instituta.– 2019. – T. 238.– S. 415-422. DOI: 10.31897/PMI.2019.4.415. [in Russian]

[2] **Drozdov, A.N.,** Gorelkina E.I. Razrabotka nasosno-jezhektornoj sistemy dlja realizacii vodogazovogo vozdejstvija na plast s ispol'zovaniem poputnogo neftjanogo gaza iz zatrubnyh prostranstv dobyvajushhih skvazhin // Zapiski Gornogo instituta.– 2022.– T. 254. –S. 191-201. DOI: 10.31897/PMI.2022.34. [in Russian]

[3] **Nasraddin, A.Zh.,** Tanzharikov P.A., Sylejmenov N.S. Ken oryndarynda munajdy susyzdandyrudy zertteu zhane zhetildiru//NEFT" I GAZ.– Almaty,2022.– №5 (131).– S. 87-95. [in Kazakh]

[4] **Drozdov, A.N.** Drozdov N.A. Perspektivy razvitija tehnologii jekspluatacii skvazhin s ispol'zovaniem strujnogo nasosa v Rossii // SPE Russian Petroleum Technology Conference.– 2015. SPE-176676-MS. DOI: 10.2118/176676-MS. [in Russian]

[5] **Tanzharikov, P.A.,** Tileubergen A.Zh., Sylejmenov N.S. Munaj zhane gaz kenoryndaryn paidalanudagy teren sorapty kondyrgylardy shtangalyk zhabdyktaryn zhetildiru // NEFT" I GAZ.– Almaty, 2022.– №4 (130).– S. 74. [in Kazakh]

[6] **Bunkin, N.F.,** Drozdov A.N., Drozdov N.A., Kozlov V.A., Tuan V.M., Fuil' V.L. Podavlenie koalescencii gazovyh puzyr'kov v vodnyh rastvorah jelektrolitov: zavisimost' ot vneshnego davlenija i skorosti dvizhenija gaza cherez kolonnu s zhidkost'ju // Physics of Wave Phenomena. –2017. – T. 25. – № 3. – S. 219-224. DOI: 10.3103/S1541308X17030098. [in Russian]

[7] **Drozdov, A.N.,** Zakenov S.T., Olmashhanov N.P., Karabaev S.D., Drozdov N.A., Gorelkina E.I., Esnijazov D.G., Kozhanov A.A. Stendovye issledovanija vlijanija svobodnogo gaza na harakteristiki mnogostupenchatogo centrobezhnogo nasosa pri otkachke vodogazovyh smesej // Neftjanoe hozjajstvo. – 2020. –№ 8.– S. 96-99. DOI: 10.24887/0028-2448-2020-8-96-99. [in Russian]

[8] **Drozdov, A.N.,** Zakenov S.T., Karabaev S.D., Olmashhanov N.P., Drozdov N.A., Esnijazov D.G., Kozhanov A.A. Vlijanie rasstojanija mezhdu soplom i gorlovinoj na harakteristiki vodostrujnogo gazovogo nasosa // Neftjanoe hozjajstvo. – 2020. – № 8. – S. 92-95. DOI: 10.24887/0028-2448-2020-8-92-99. [in Russian]

[9] **Karabaev, S.,** Olmashhanov N., Mirsamiev N., Mugisho Zh. Stendovoe issledovanie nasosno-jezhektornoj sistemy pri odnovremennj zakachke vody i gaza // ICAM 2019. Springer. –2019. DOI: 10.1007/978-3-030-22974-0_52. [in Russian]

[10] Gidravlicheskie harakteristiki zhidkostno-gazovogo jezhektornogo nasosa so sploshnoj zhidkostnoj strujoj // Chemical Engineering Research and Design.– 2021.– T. 168.– S. 435-442. DOI: 10.1016/j.cherd.2021.02.022.

[11] **Zhang, Y.,** Sun J., Liu Z. i dr. Issledovanie optimizacii harakteristik gazozhidkostnogo jezhektora v ustrojstve dlja mnogofaznogo smeshannogo transporta // Journal of Mechanics. – 2022.– T. 38.– S. 22-31. DOI: 10.1093/jom/ufac001. [in Russian]

[12] Povyshenie kojefficienta jezhekcii gaza v zhidkostno-gazovom jezhektornom nasose // Chemical Engineering Research and Design. – 2023.–T.189. – S. 117-125. DOI: 10.1016/j.cherd.2022.11.009. [in Russian]

[13] Gorelkina, E.I. Metodika rascheta rabochih parametrov zhidkostno-gazovogo jezhektora s ispol'zovaniem sredneintegral'nyh harakteristik // Scientific Proceedings of the NIPI Oil and Gas SOCAR. –2024. – № 4.– S. 102-110. DOI: 10.5510/OGP20240401024. [in Russian]

[14] **Drozdov, A.N.,** Chernishov K.I., Kalinnikov V.N., Zakiev A.R., Galimov A.M., Gorelkina E.I. Zakachka vodogazovyh smesej v plast nasosno-jezhektornoj sistemoj s ispol'zovaniem presnoj i vysokomineralizovannoj plastovoj vody // Neftjanoe hozjajstvo. – 2025. –№ 2.– S. 54-57. DOI: 10.24887/0028-2448-2025-2-54-57. [in Russian]

[15] **Drozdov, A.N.,** Verbickij V.S., Shishulin V.A., Gorelkina E.I. Issledovanie rabochih harakteristik zhidkostno-gazovyh jezhektorov dlja zakachki vodogazovyh smesej v plast // Neftjanoe hozjajstvo. –2025. –№ 3. –S. 96-99. DOI: 10.24887/0028-2448-2025-3-96-99. [in Russian]

[16] **Muslimov, R.H.** Planirovanie dopolnitel'noj dobychi nefti i ocenka jeffektivnosti metodov uvelichenija nefteotdachi. – Kazan': Kazanskij gosudarstvennyj universitet, 1999.– 280 s. [in Russian]

[17] **Amirov, A.A**. Obzor primenenija tehnologii vodogazovogo vozdejstvija / A.A. Amirov // Molodoj uchjonyj.– 2020.– №20. – S. 77-79. [in Russian]

[18] **Kokorev, V.I.** Gazovye metody — novaja tehnologija uvelichenija nefteotdachi // Neftepromyslovoe delo. –2009. –№ 11.– S. 24-27. [in Russian]

ТӨМЕН ҚЫСЫМДЫ ІЛЕСПЕ МҰНАЙ ГАЗЫНЫҢ АЙНЫМАЛЫ ШЫҒЫНЫ ЖАҒДАЙЫНДА СОРАП-ЭЖЕКТОРЛЫҚ ЖҮЙЕНІҢ ЖҰМЫС РЕЖИМДЕРІН РЕТТЕУ

Танжариков П.А., техника ғылымдарының кандидаты, профессор
Амангельдиева Г.Б., мұнай газ ісі магистры
Махатова Н.Ш., техника және технология магистр
Сарабекова Ұ.Ж. PhD, доцент

Қорқыт Ата атындағы Қызылорда университеті, Қызылорда қ., Қазақстан

Аңдатпа. Мақалада төмен қысымды ілеспе мұнай газының шығыны кең аралықта өзгерген жағдайдағы сорап-эжекторлық жүйенің жұмыс режимдерін таңдау және реттеу мәселелері қарастырылған. Зерттеудің мақсаты – жарияланған эксперименттік сипаттамаларды қайта талдау негізінде газ шығыны мен саптама алдындағы жұмыс қысымының эжектордағы қысым айырмасына және оның тиімділігіне әсерін анықтау, сондай-ақ газ шығыны өзгермелі жағдайларда реттеу принципін нақтылау. Қарастырылған деректер бойынша газдың тәуліктік шығыны 650-ден 8880 м³/тәулікке дейін өзгерген, бұл ретте ең жоғары және ең төменгі мәндердің арақатынасы 13,66 құрады. Эжектордың жұмыс қысымы 0,4-2,13 МПа аралығында болды; ең жоғары тиімділікке сәйкес келетін газ шығыны 1,26-5,51 л/с аралығында өзгерді, ал эжектордағы қысым айырмасы 0,106-0,699 МПа аралығын құрады. Жұмыс қысымының жоғарылауы тиімді жұмыс аймағының жоғары газ шығындары жағына ығысуына әкелді, ал 0,8-2,13 МПа аралығында максималды тиімділіктің өзгеруі 0,9%-дан аспады. Алынған нәтижелер сорап білігінің айналу жиілігін реттеудің негізгі параметрі ретінде пайдалануға болатынын, ал газ шығынының өзгеру диапазоны кең болған жағдайда жиіліктік реттеуді қысқа мерзімді циклдік жұмыс режимімен толықтыруға болатынын көрсетеді.

Түйін сөздер: ілеспе мұнай газы, сорап-эжекторлық жүйе, сұйық-газ эжекторы, жұмыс қысымы, газ шығыны, тиімділік, жұмыс режимін реттеу.

РЕГУЛИРОВАНИЕ РЕЖИМОВ РАБОТЫ НАСОСНО-ЭЖЕКТОРНОЙ СИСТЕМЫ ПРИ ПЕРЕМЕННОМ РАСХОДЕ ПОПУТНОГО НЕФТЯНОГО ГАЗА НИЗКОГО ДАВЛЕНИЯ

Танжариков П.А., кандидат технических наук, профессор
Амангельдиева Г.Б., магистр нефтегазового дела
Махатова Н.Ш., магистр техники и технологий
Сарабекова У.Ж. PhD, доцент

Кызылординский университет имени Коркыт Ата, г.Кызылорда, Казахстан

Аннотация. В статье рассматриваются вопросы выбора и регулирования режимов работы насосно-эжекторной системы при широком диапазоне изменения расхода попутного нефтяного газа низкого давления. Цель исследования заключается в определении на основе повторного анализа опубликованных экспериментальных характеристик влияния расхода газа и рабочего давления перед соплом на перепад давления в эжекторе и его эффективность, а также в уточнении принципа регулирования при изменяющемся расходе газа. Согласно рассмотренным данным, суточный расход газа изменялся от 650 до 8880 м³/сут, при этом отношение максимального значения к минимальному составило 13,66. Рабочее давление эжектора находилось в диапазоне 0,4–2,13 МПа; расход газа, соответствующий режимам максимальной эффективности, изменялся от 1,26 до 5,51 л/с, а перепад давления в эжекторе составлял 0,106–0,699 МПа. Повышение рабочего давления приводило к смещению эффективного диапазона работы в сторону более высоких расходов газа, тогда как изменение максимальной эффективности в диапазоне давлений 0,8–2,13 МПа не превышало 0,9%. Полученные результаты показывают, что частота вращения вала насоса может использоваться в качестве основного регулируемого параметра, а при широком диапазоне изменения расхода газа частотное регулирование может дополняться кратковременным циклическим режимом работы.

Ключевые слова: попутный нефтяной газ, насосно-эжекторная система, жидкостно-газовый эжектор, рабочее давление, расход газа, эффективность, регулирование режима работы.